Cross Section Drawing

StyleLine Single Hung Window
1" Fin Set Back W/ "J" Channel

CAD File Scale	View	File Name	Units
NTS	Horizontal & Vertical	6230J-01SH	Inch

More Technical Documents can be found at **milgard.com/professionals**

Due to continual research and development, details may be changed at any time. ©2013 Milgard Mfg.

SINGLE HUNG
SERIES 6230J

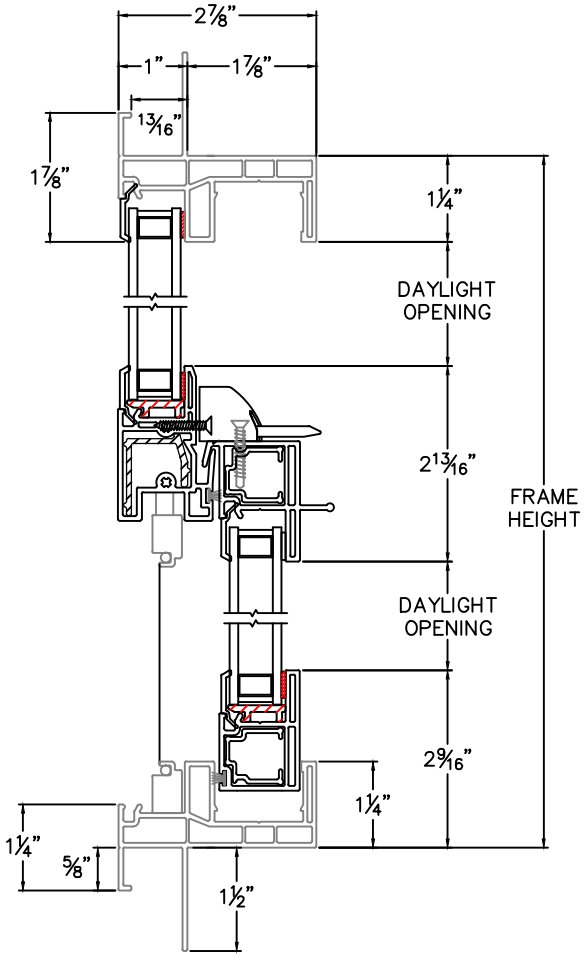

HEAD & SILL

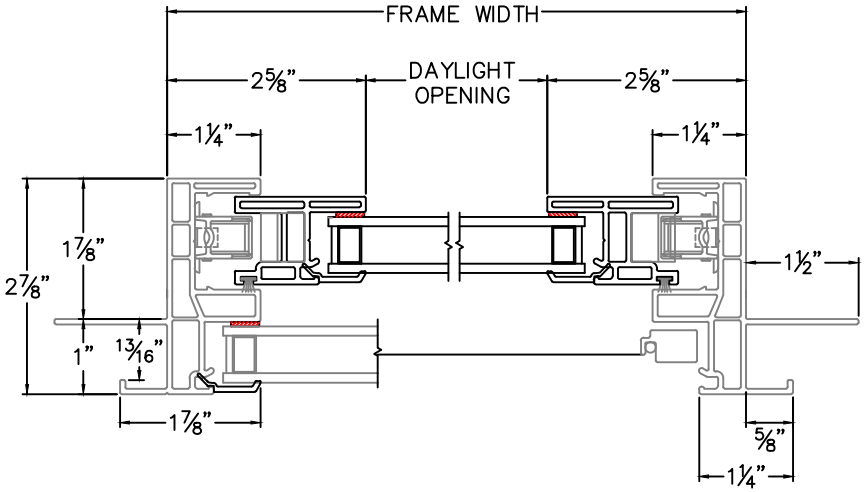

JAMBS