Cross Section Drawing

Ultra French InSwing Door, 2 Panel Passive/Active, ADA Compliant
1" Nailfin Setback

CAD File Scale	View	File Name	Units	Revision
NTS	Horizontal & Vertical	Ultra_3942_IS_low_sill_ADA_AP_1in	Inch	06/2016

More Technical Documents can be found at **milgard.com/professionals**

Due to continual research and development, details may be changed at any time. ©2013 Milgard Mfg.

IN SWING
SERIES 3942

Shown with ADA Compliant Handle

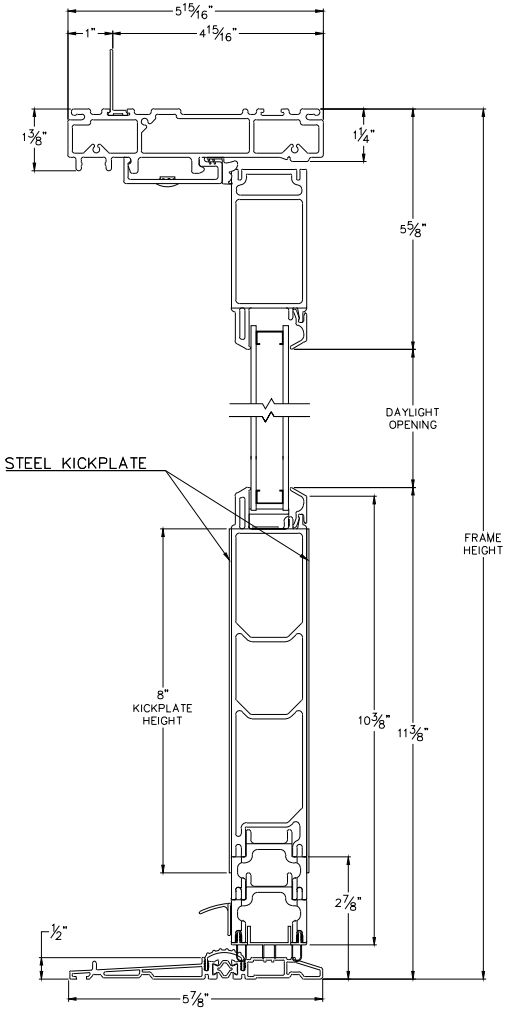

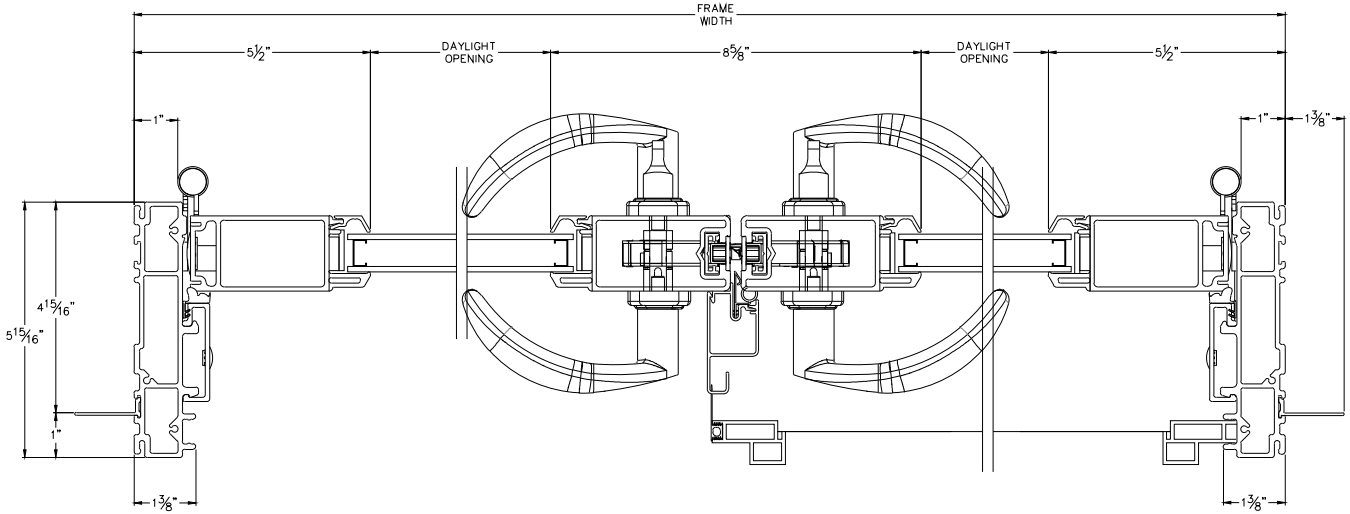

HEAD & SILL

JAMBS