Cross Section Drawing

Tuscany Outswing Door
1 3/8" Nailfin Setback, 6 9/16" Wall Condition

CAD File Scale	View	File Name	Units
NTS	Horizontal & Vertical	**Tuscany_8663T_VOS_X_1.375in_6.563wall**	Inch

More Technical Documents can be found at **milgard.com/professionals**

Due to continual research and development, details may be changed at any time. ©2013 Milgard Mfg.

OUTSWING DOOR
SERIES 8663

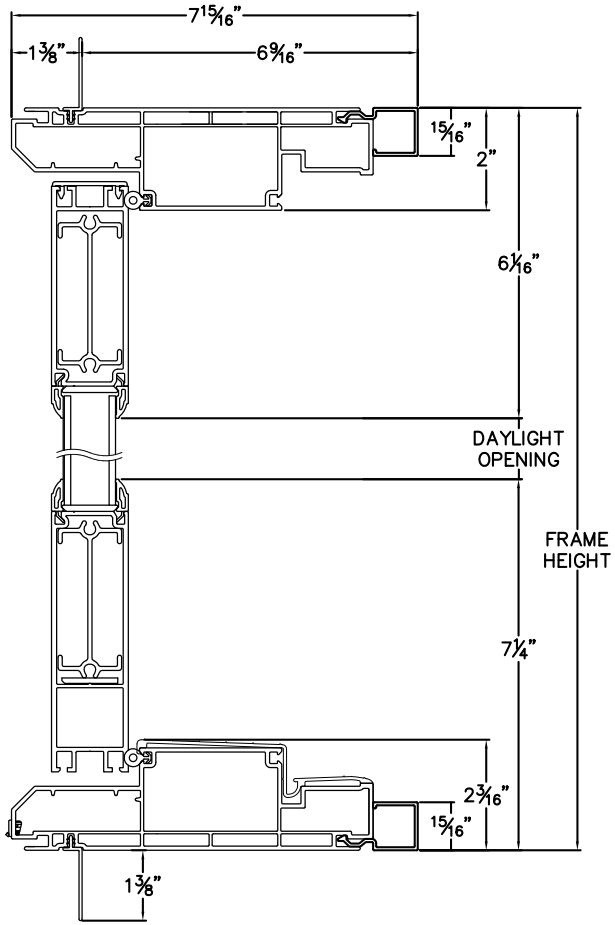

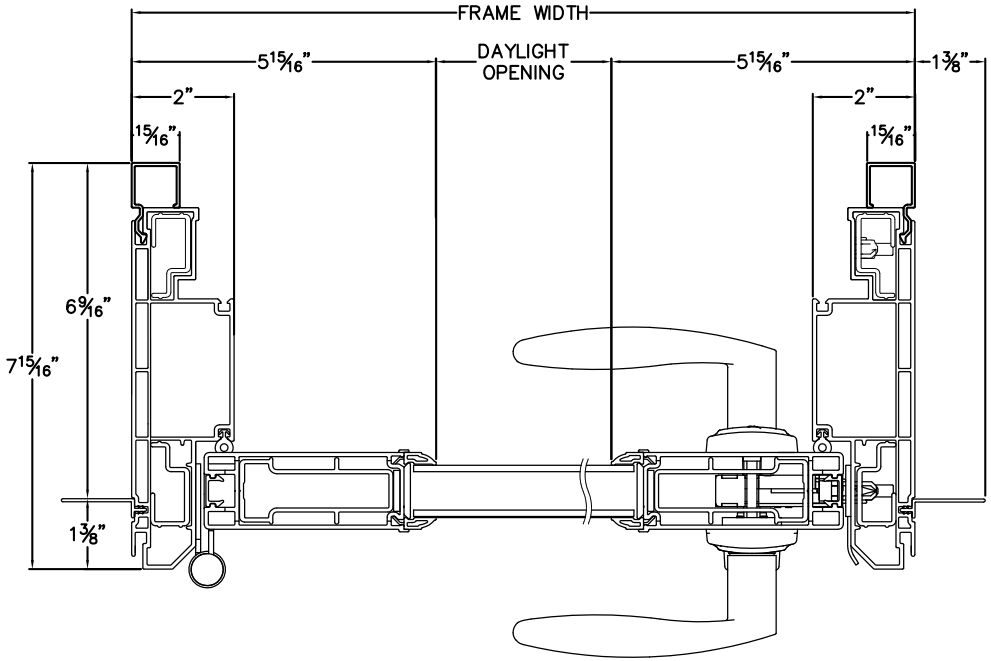

HEAD & SILL

JAMBS