Cross Section Drawing

C700 Single Hung Two Wide Block Frame

MILGARD®
WINDOWS and DOORS

CAD File Scale	View	File name	Units	Date
NTS	Horizontal & Vertical	C700_12210_DSH_BLOCK_FRAME	Inch	03/2025

More Technical Documents can be found at milgard.com/professionals
Due to continual research and development, details may be changed at any time. (C) 2023 Milgard Mfg.

SINGLE HUNG
SERIES 12210

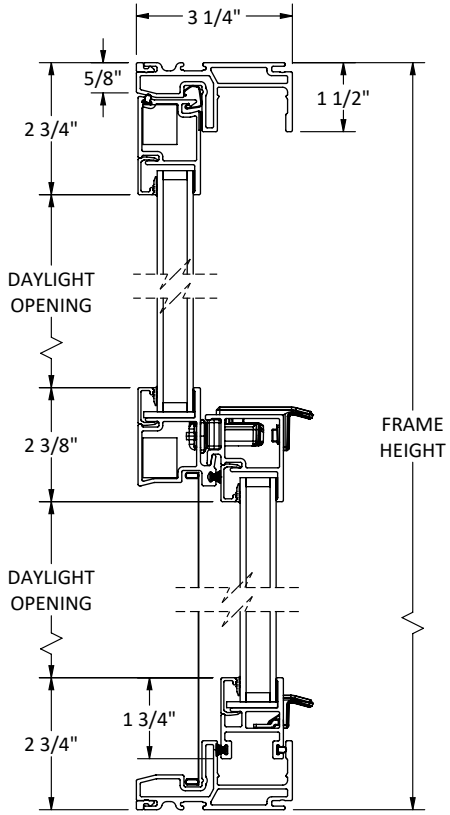

HEAD & SILL

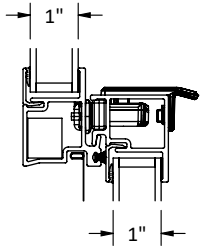

ALTERNATE 1" GLASS I.G.U.

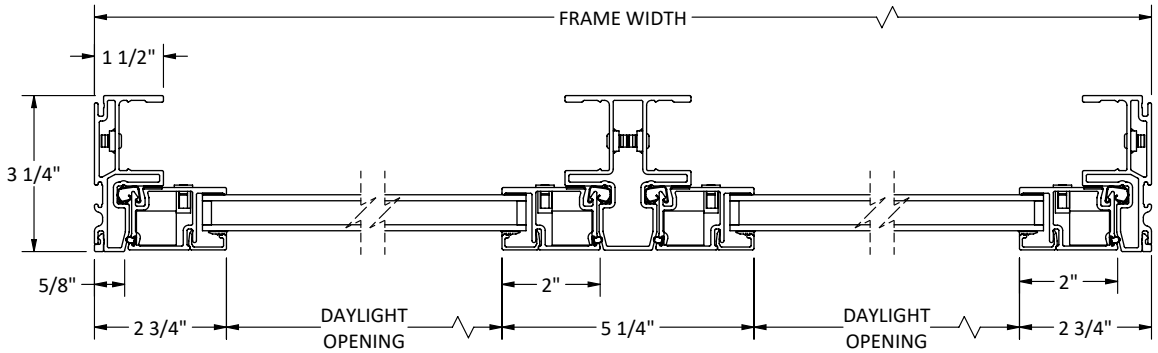

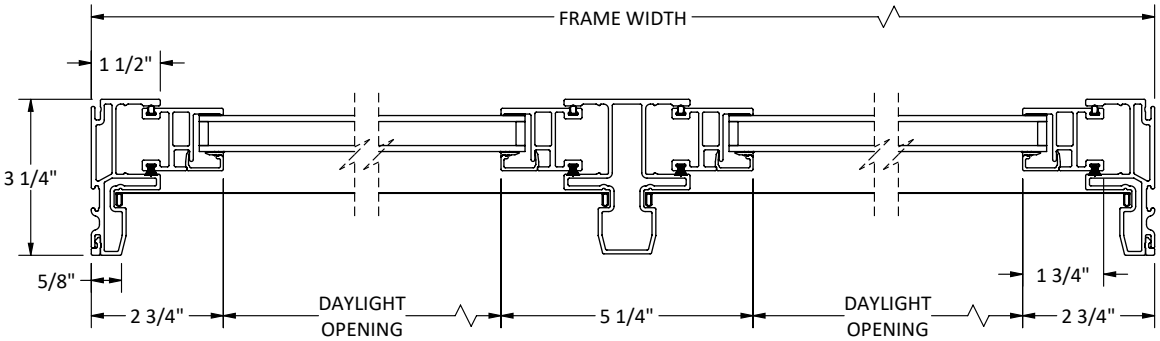

JAMBS