Cross Section Drawing

C700 SGD
5-5/8" FRAME 1.375" FIN WITH STUCCO

CAD File Scale	View	File name	Units	Date
NTS	Horizontal & Vertical	OXO_R A3 C700 SGD 1.375 FIN WITH STUCCO 12610-04	Inch	02/18/26

More Technical Documents can be found at milgard.com/professionals
Due to continual research and development, details may be changed at any time. (C) 2023 Milgard Mfg.

OXO_R
C700 SGD

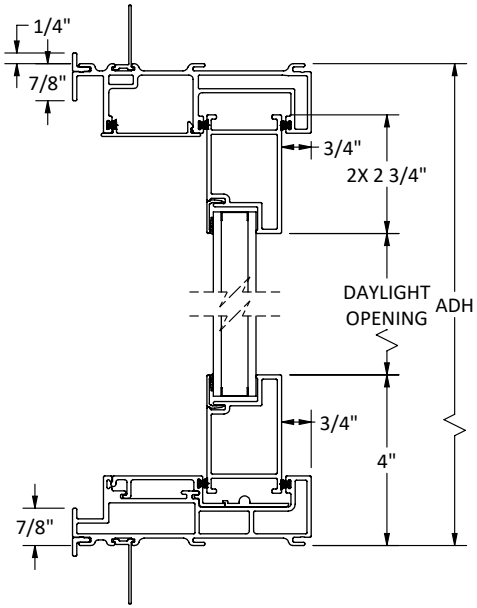

HEAD AND SILL

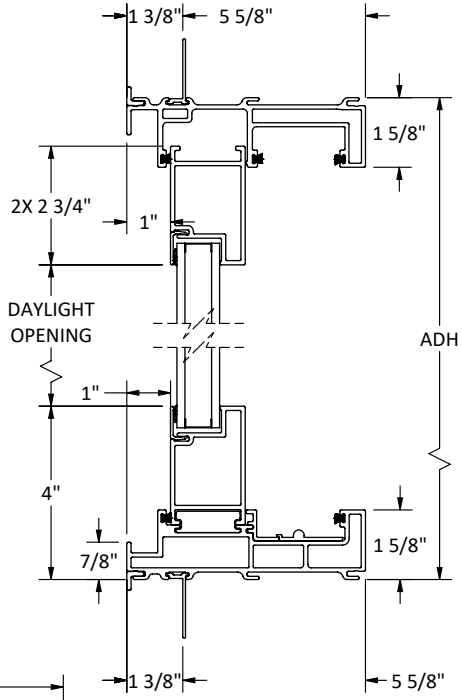

HEAD AND SILL

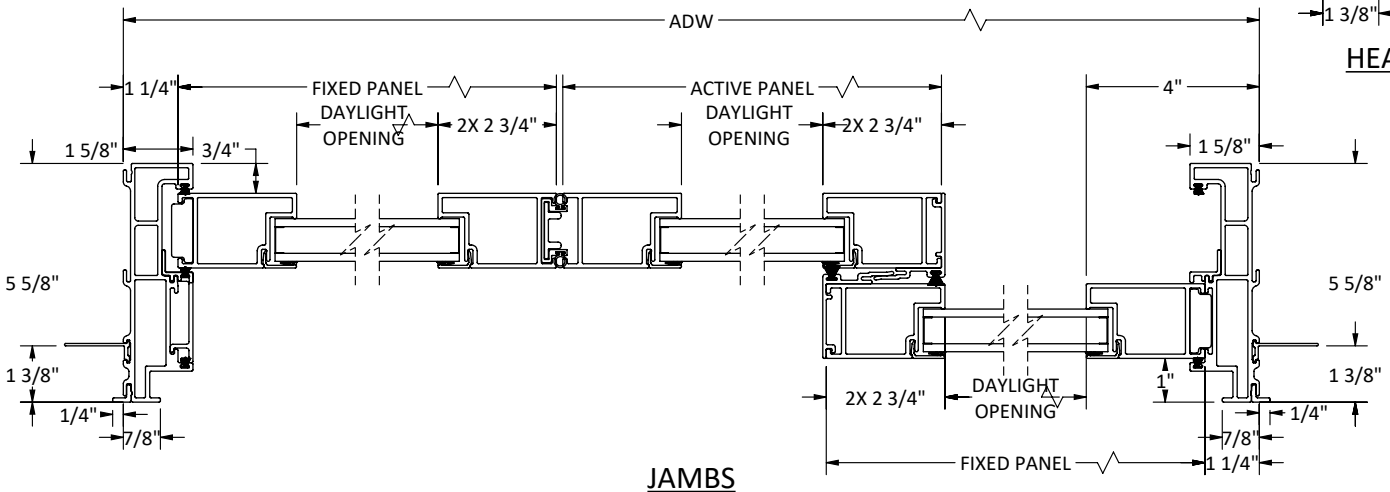

JAMBS